Water pipe ownership diagram

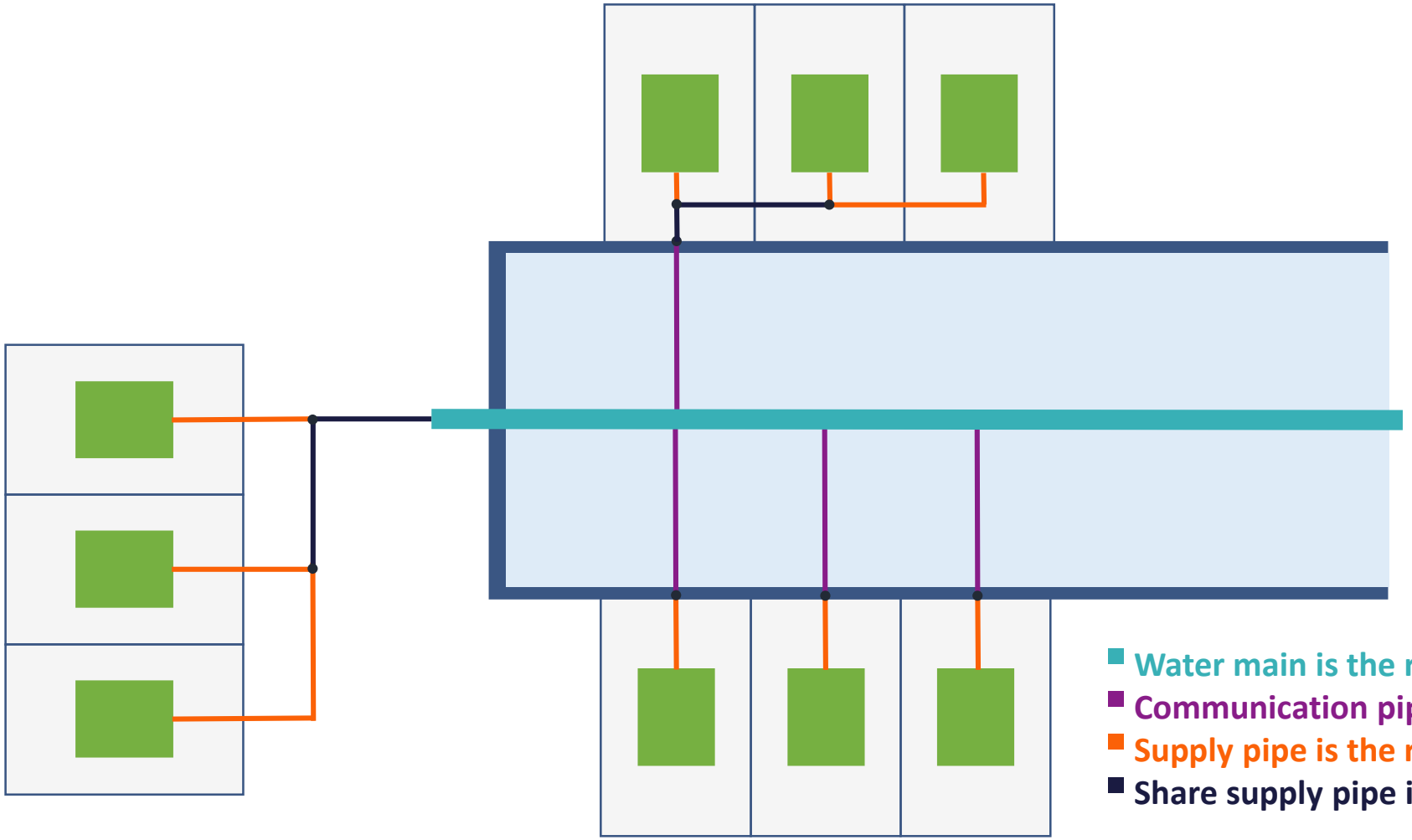

- Water main is the responsibility of the company
- Communication pipe is the responsibility of the company
- Supply pipe is the responsibility of the property owner
- Share supply pipe is the responsibility of the property owner